EZ36

Tracked Zero Tail Excavator

Compact design and high performance

Get in and start working – with the EZ36, performance meets maximum efficiency. This zero tail excavator is ideal if compact dimensions are needed. Minimal rear overhang makes working along walls and other obstacles an easy task. The machine features intuitive operation using a joystick, display and jog dial, as well as a comfortable working environment. This leaves the operator in full control of the application. Configurable to meet a customer's requirements, the EZ36 offers dealer-installed options, including a hydraulic thumb and rotating beacon.

Highlights

- Comfortable, fully glazed cab
- Intuitive operating concept
- Optimized drive concept
- VDS Vertical Digging System
- Zero Tail

Technical Data

Hydraulic

Operating pressure hydraulics	240.0 bar
Hydraulicpump	Axial piston and 2 gear pumps
Flow rate max.	120.0 l/min

Mechanical - Output Details

Travel speed	4.7 km/h

Mechanical Details

Length	5,508.0 mm
Width	1,750.0 mm
Height	2,711.0 mm
Operating weight (min.-max.)	3,718.0 - 4,945.0 kg
Digging depth (max.)	3,497.0 mm

Engine

Cooling	Water-cooling
Engine type	Diesel engine
Cylinder	3.0
Cylinder capacity	1,642.0 cm³
Inclined position max.	30.0 °
Fuel	HVO EN15940
Effective power	18.2 kW
Nominal Engine speed	2,400.0 1/min
Exhaust-gas limit	EU Stage V
Battery capacity (nom. value)	71.0 Ah
Engine Manufacturer	Yanmar
Engine Designation	3TNV88

Environment Data

Sound power LWA, guaranteed	94.0 dB(A)

Chassis

Traction drive	Axialpistonmotor with RGU

Shipping and Storage

Shipping weight	3,529.0 kg

The illustrations, equipment and data shown may deviate from the current delivery program of your country. Optional equipment subject to additional charge may be shown. Subject to changes.

Copyright © 2026 Wacker Neuson SE | www.wackerneuson.com

22,2 kW Diesel engine (Stage 3a)

Cooling	Water-cooling
Engine type	Diesel engine
Cylinder	3
Cylinder capacity	1,642 cm³
Effective power	22.2 kW
Nominal Engine speed	2,400 1/min
Exhaust-gas limit	EPA3
Starter battery Voltage	12 µg/l
Engine Manufacturer	Yanmar
Engine Designation	3TNV88
Stroke	90 mlai
Bore	88 mlai

18,2 kW Diesel engine (Stage 5)

Cooling	Water-cooling
Engine type	Diesel engine
Cylinder	3
Cylinder capacity	1,642 cm³
Fuel	Diesel EN 590
Effective power	18.2 kW
Nominal Engine speed	2,400 1/min
Idling speed	1,200 1/min
Maximum torque	87.8 Nm
Engine speed (max. torque)	2,400 1/min
Exhaust-gas limit	EU Stage V
Engine Manufacturer	Yanmar
Engine Designation	3TNV88
Stroke	90 mlai
Bore	88 mlai

The illustrations, equipment and data shown may deviate from the current delivery program of your country. Optional equipment subject to additional charge may be shown. Subject to changes.

Copyright © 2026 Wacker Neuson SE | www.wackerneuson.com

Dimensions

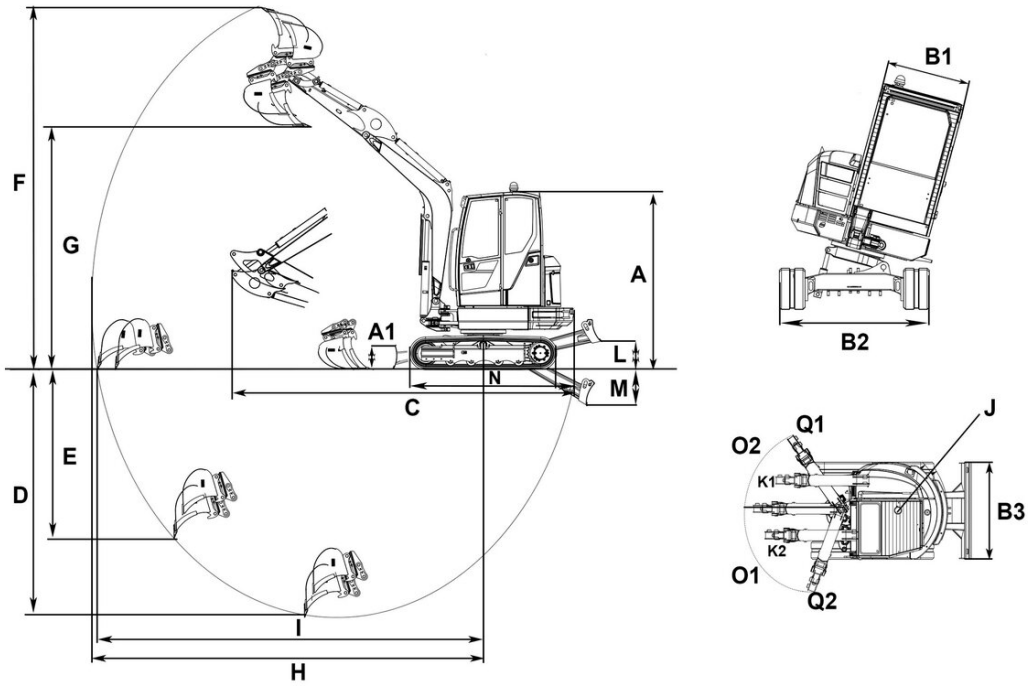

			VDS
A	Height with cab	2,491 mm	2,573 mm
A1	Height of dozer blade	357 mm	357 mm
A	Total height of cabin with rotating beacon	2,630 mm	2,711 mm
B1	Width of cab	980 mm	980 mm
B2	Width travel gear	1,750 mm	1,750 mm
B3	Width of dozer blade	1,750 mm	1,750 mm
C	Transport length	5,503 mm	5,489 mm
D	Digging depth max., short shovel arm	3,247 mm	3,172 mm
	Digging depth max., long shovel arm	3,497 mm	3,422 mm
E	Piercing depth max., short shovel arm	2,123 mm	2,048 mm
	Piercing depth max., long shovel arm	2,360 mm	2,285 mm
F	Piercing height max., short shovel arm	4,925 mm	5,004 mm
	Piercing height max., long shovel arm	5,082 mm	5,157 mm
G	Dumping height max., short shovel arm	3,336 mm	3,411 mm
	Dumping height max., long shovel arm	3,489 mm	3,564 mm
H	Digging radius max., short shovel arm	5,298 mm	5,270 mm
	Digging radius max., long shovel arm	5,582 mm	5,546 mm
I	Max. reach at ground level (short shovel arm)	5,391 mm	5,378 mm
	Max. reach at ground level (long shovel arm)	5,641 mm	5,629 mm
J	Tail swing radius	933 mm	933 mm
K1	Boom offset max. (to center of bucket right side)	680 mm	680 mm
K2	Boom offset max. (to center of bucket left side)	650 mm	650 mm
L	Stacking height max. (dozer blade above surface)	393 mm	393 mm
M	Digging depth max. (dozer blade below surface)	505 mm	505 mm
N	Length travel drive	2,062 mm	2,062 mm
O1	Max. swivel angle (arm system to the left)	70 °	70 °
O2	Max. swivel angle (arm system to the right)	45 °	45 °
Q1	Boom swing radius right	55 °	55 °
Q2	Boom swing radius left	70 °	70 °

The illustrations, equipment and data shown may deviate from the current delivery program of your country. Optional equipment subject to additional charge may be shown. Subject to changes.

Copyright © 2026 Wacker Neuson SE | www.wackerneuson.com